Daylighting

Daylighting

Why?:

- It provides a healthier and more enjoyable indoor climate

Daylighting

Why?:

- It provides a healthier and more enjoyable indoor climate

- It conserves the earth's resources

Daylighting

Why?:

- It provides a healthier and more enjoyable indoor climate

- It conserves the earth's resources

- Because it saves energy, it saves money.

Visual comfort is the main determinant of lighting requirements. Good lighting will provide a suitable intensity and direction of illumination on the task area, appropriate colour rendering, the absence of discomfort and, in addition, a satisfying variety in lighting quality and intensity from place to place and over time.

Visual comfort is the main determinant of lighting requirements. Good lighting will provide a suitable intensity and direction of illumination on the task area, appropriate colour rendering, the absence of discomfort and, in addition, a satisfying variety in lighting quality and intensity from place to place and over time.

Poor lighting can cause eyestrain, fatigue, headaches and irritability, to say nothing of mistakes and accidents.

Artificial lighting is a substantial consumer of energy in non-domestic buildings. In offices it can account for as much as 50% of electricity consumption, and if the building has a deep plan it may use more energy than the heating does.

Artificial lighting is a substantial consumer of energy in non-domestic buildings. In offices it can account for as much as 50% of electricity consumption, and if the building has a deep plan it may use more energy than the heating does.

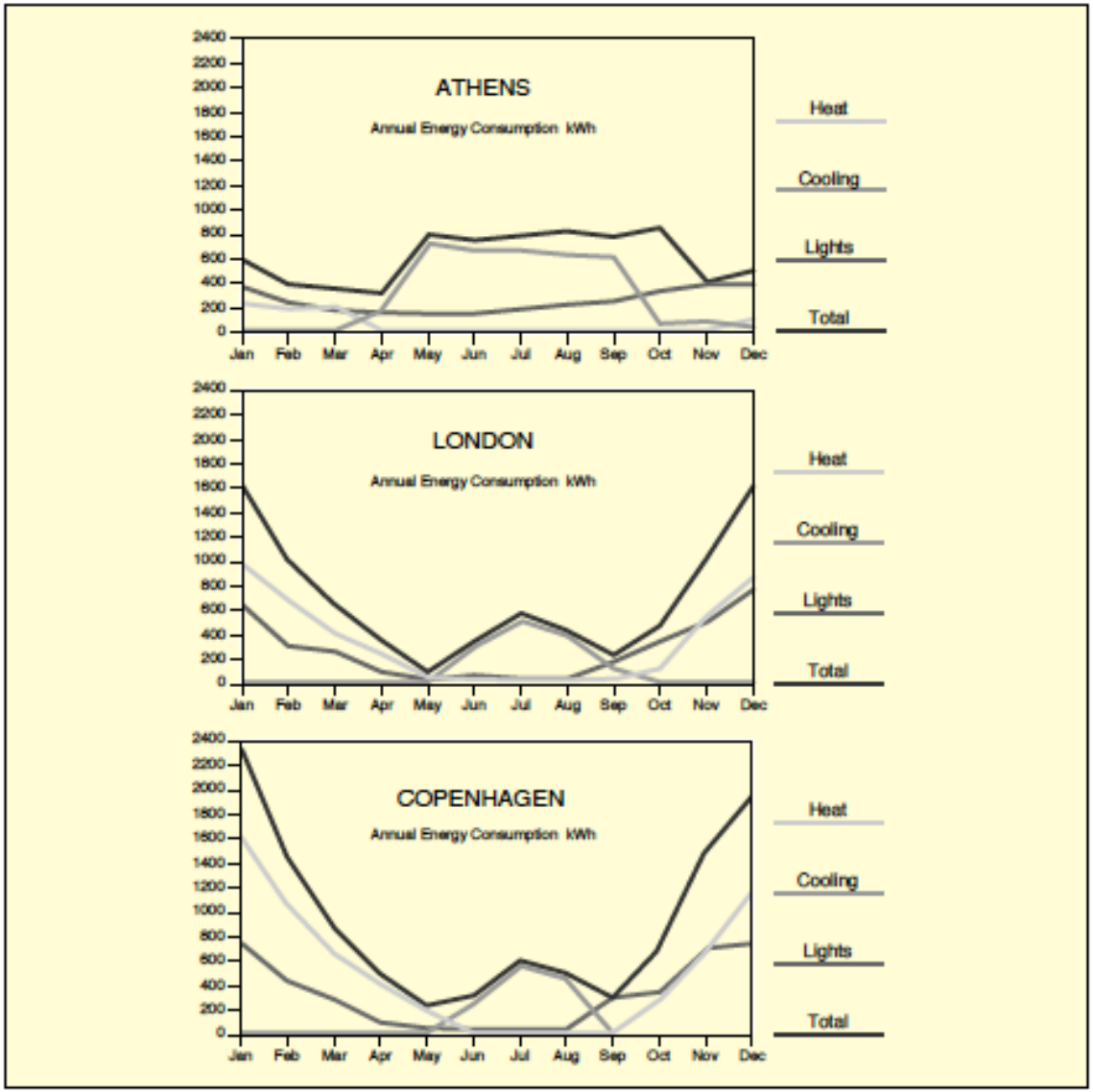

Figure 2: Energy costs in a model office room.

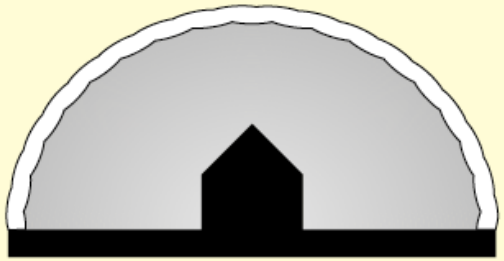

Uniform Luminance Sky Distribution

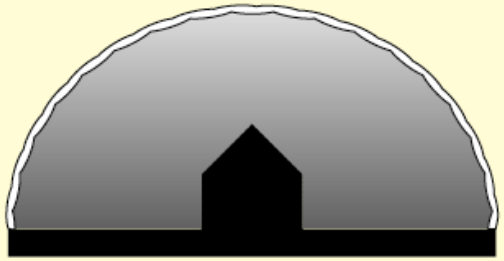

Standard Overcast Sky Distribution

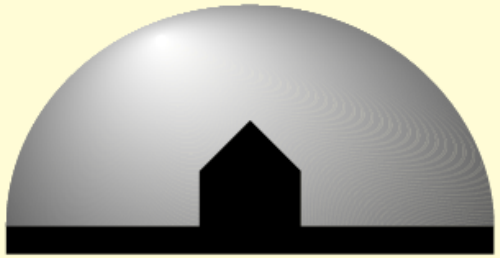

Clear Blue Sky Distribution

Figure 3: Standard skies.

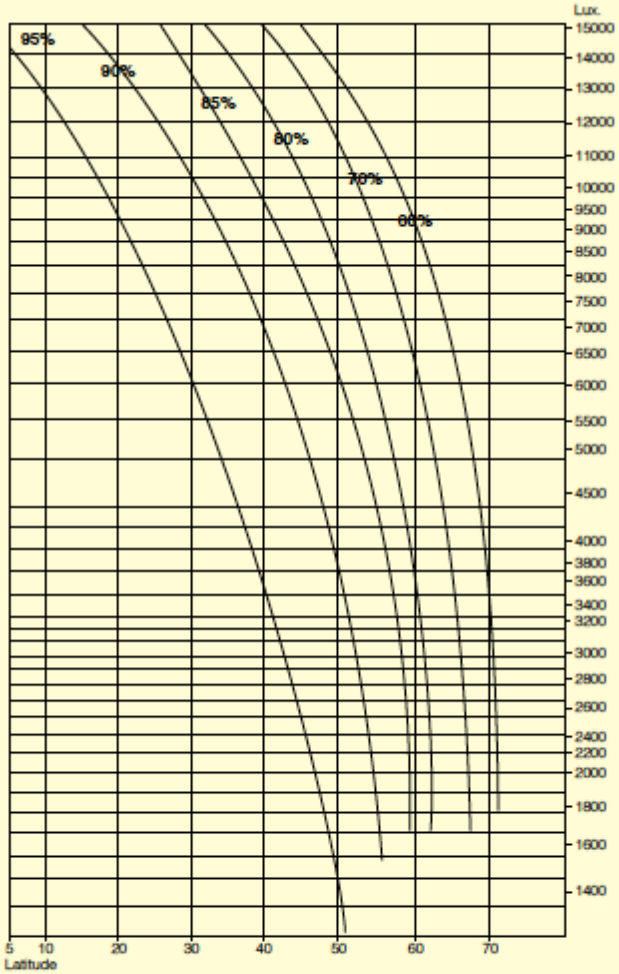

Figure 4 : Availability of outdoor light as a function of site latitude (7).

Corridors/Toilets	100-150 lux
Restaurant/Canteen	200
Library/Classroom	300
General office	500
Workbench	500
Drawing office	500-750
High-precision tasks	1500

Table 2 : Some typical recommended illuminances.

The starting point for daylighting design, however, is not a set of absolute values, but instead the daylight factor , a measure of indoor daylight illuminance at a given location as a percentage of illuminance outdoors

Church	1%
Hospital ward	1%
Office	2%
Classroom	2%
Factory	5%

Table 3 : Recommended minimum daylight factors (4).

Calculating the daylight factor

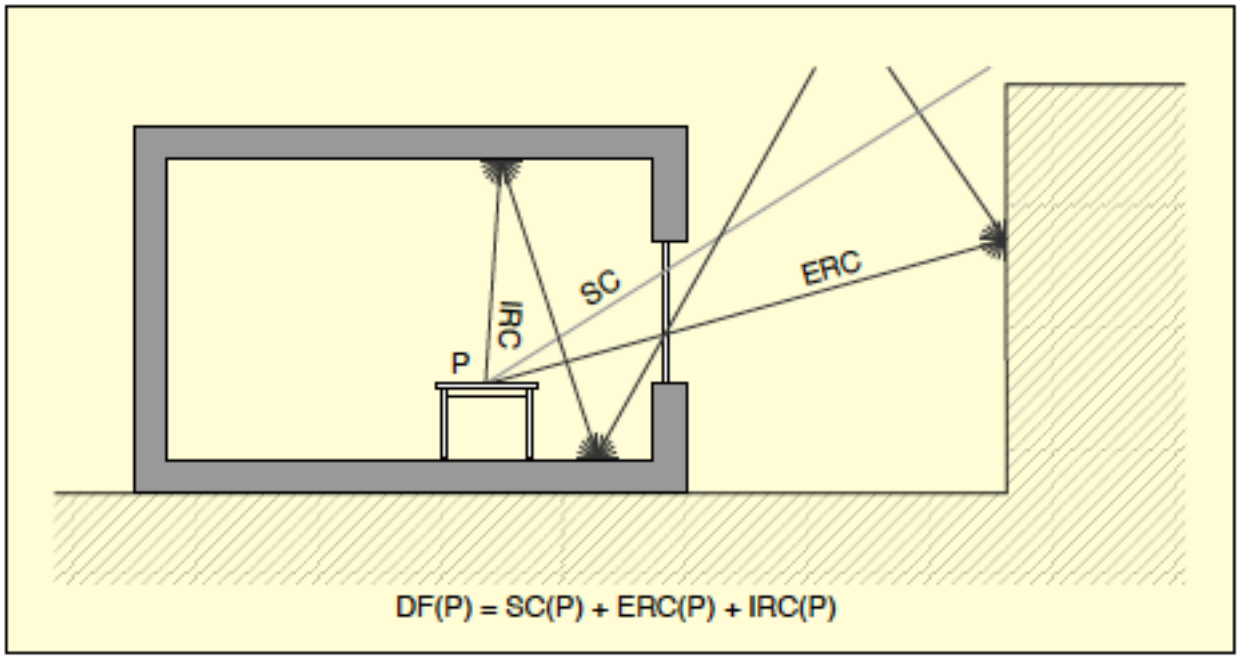

SC = Sky Component
ERC = Externally Reflected Component
IRC = Internally Reflected Component

The average daylight factor df is defined as:
df = (Ein / Eout) x 100%

Ein = average interior illuminance
Eout = the unobstructed horizontal outdoor illuminance

Calculating the daylight factor

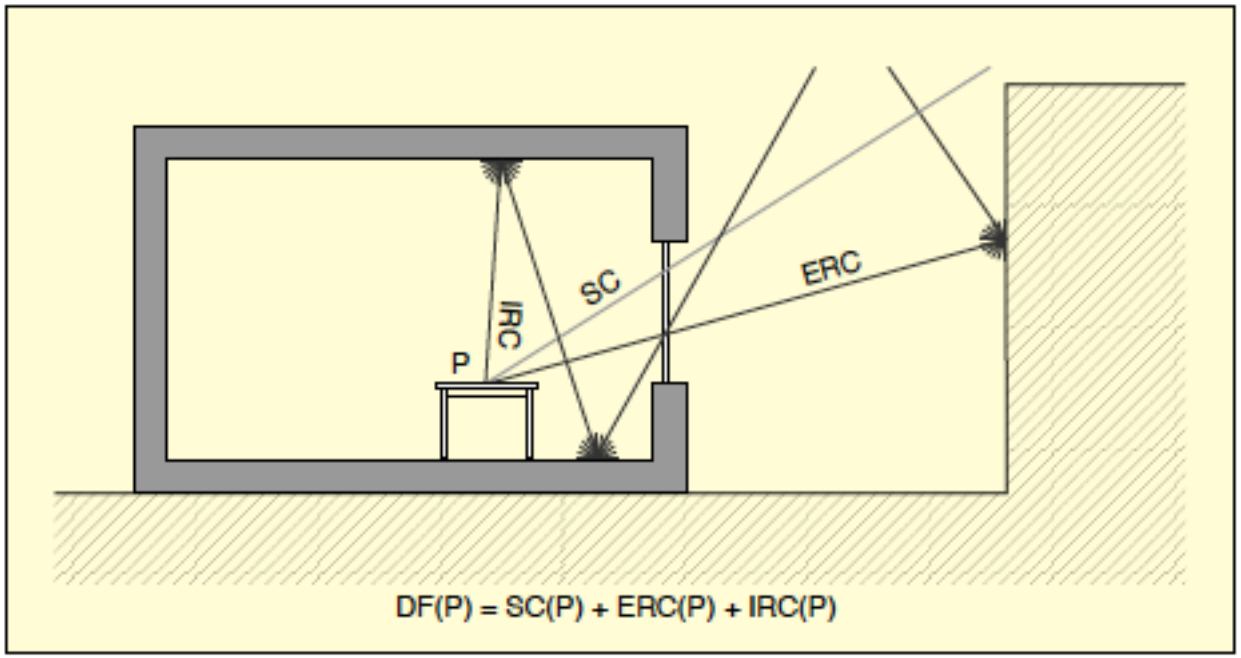

SC = Sky Component
ERC = Externally Reflected Component
IRC = Internally Reflected Component

- Sum of the 3 components gives the illuminance level (LUX) at the point considered.

Lux = SC + ERC + IRC

Daylight Factor is used in building design in order to assess the natural lighting level as received on the working plane

Calculating the daylight factor

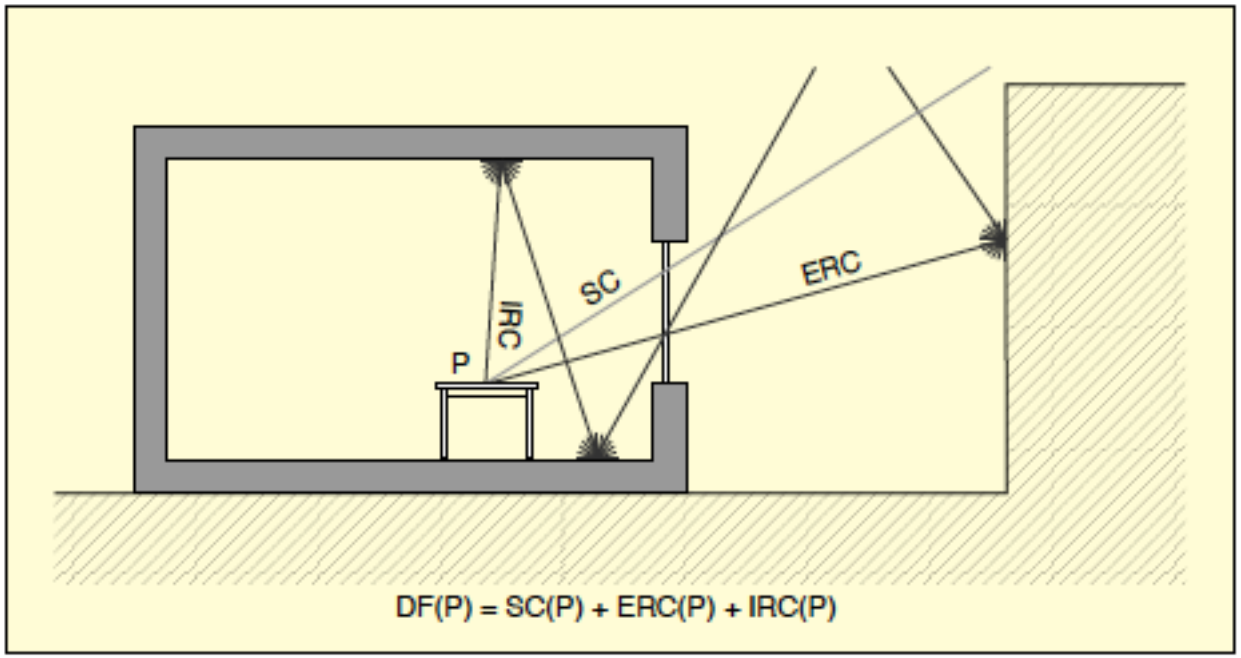

SC = Sky Component
ERC = Externally Reflected Component
IRC = Internally Reflected Component

The average daylight factor df is defined as:
df = (Ein / Eout) x 100%

Ein = average interior illuminance
Eout = the unobstructed horizontal outdoor illuminance

CALCULATING DAYLIGHT FACTOR

- A simple RULE OF THUMB can be used to approximate D.F.

$$D = 0.1 \times P$$

where D = Daylight factor

P = Percentage glazing to floor area

E.g., given a room of 100 sq.m. floor area with 20 sq.m. of glazing.

$$D = 0.1 \times (20/100) \times 100$$
$$= 0.1 \times 20$$
$$= 2\ \%$$

- Calculation of natural illuminance at the reference point inside a bldg. by applying the following formula,

$$D = (Ei / Eo) \times 100$$

Where, D = D.F.

Ei = illuminance at reference point in bldg.

Eo = illuminance at the reference point if the room was unobstructed.

THE DESIGN SKY CONCEPT

When the Daylight Factor for a given point has been established, it can be converted into an illumination value, if the outdoor illumination is known.

E.g.1:

Both factors of E are measured in lux (lumens per sq.m.) with Eo taken as standard 5000 lux for unobstructed sky in the UK, DF = 2%.

Therefore, D = (Ei / Eo) X 100

or Ei = (D X Eo) / 100
= (2 X 5000)/100
= 100

Therefore, Ei = 100 lux.

Design Strategies

- A primary goal is to bring light into each room from two sides.

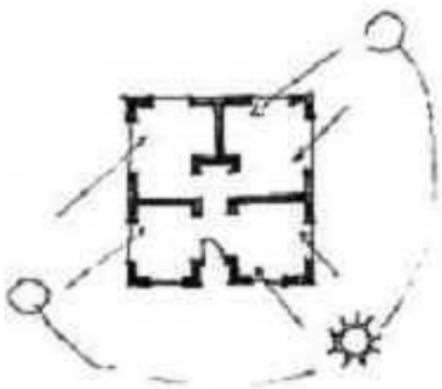

A Simple four-square house allows light into two sides of each corner room.

A long thin house allows light to enter from opposite sides of most rooms.

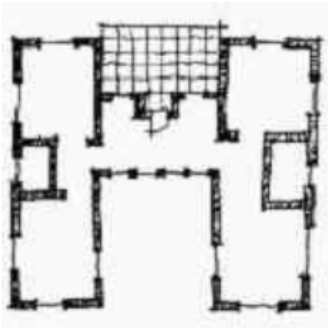

A house with wings creates rooms with the potential for light on two or three sides.

Design Strategies

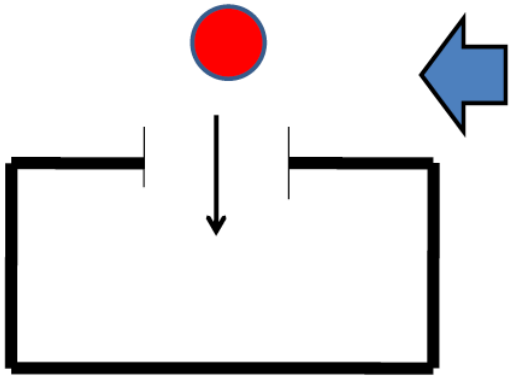

SKYLIGHT TOPLIGHTING

- Use of skylights to introduce light from above.
- Best done with diffusing skylight to prevent direct sun rays from causing overly bright spots.
- Skylights should be no more than 5% - 6% of the roof area.

CLERESTORY TOPLIGHT

- Use of high windows, above ceiling line.
- Best done when the windows faces north to prevent direct solar radiation.
- With north facing fenestration, ceiling aperture can be very large.

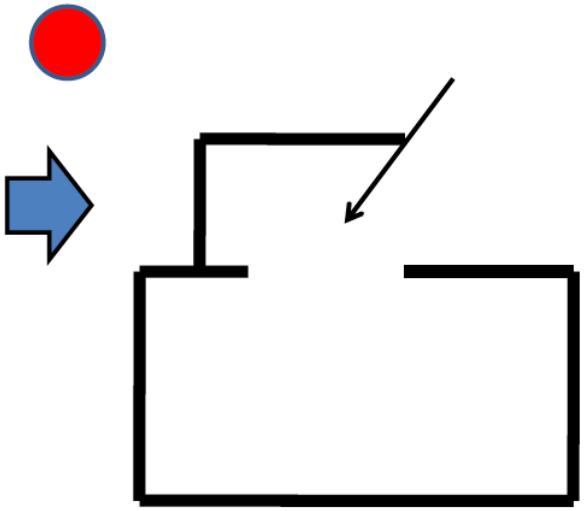

Design Strategies

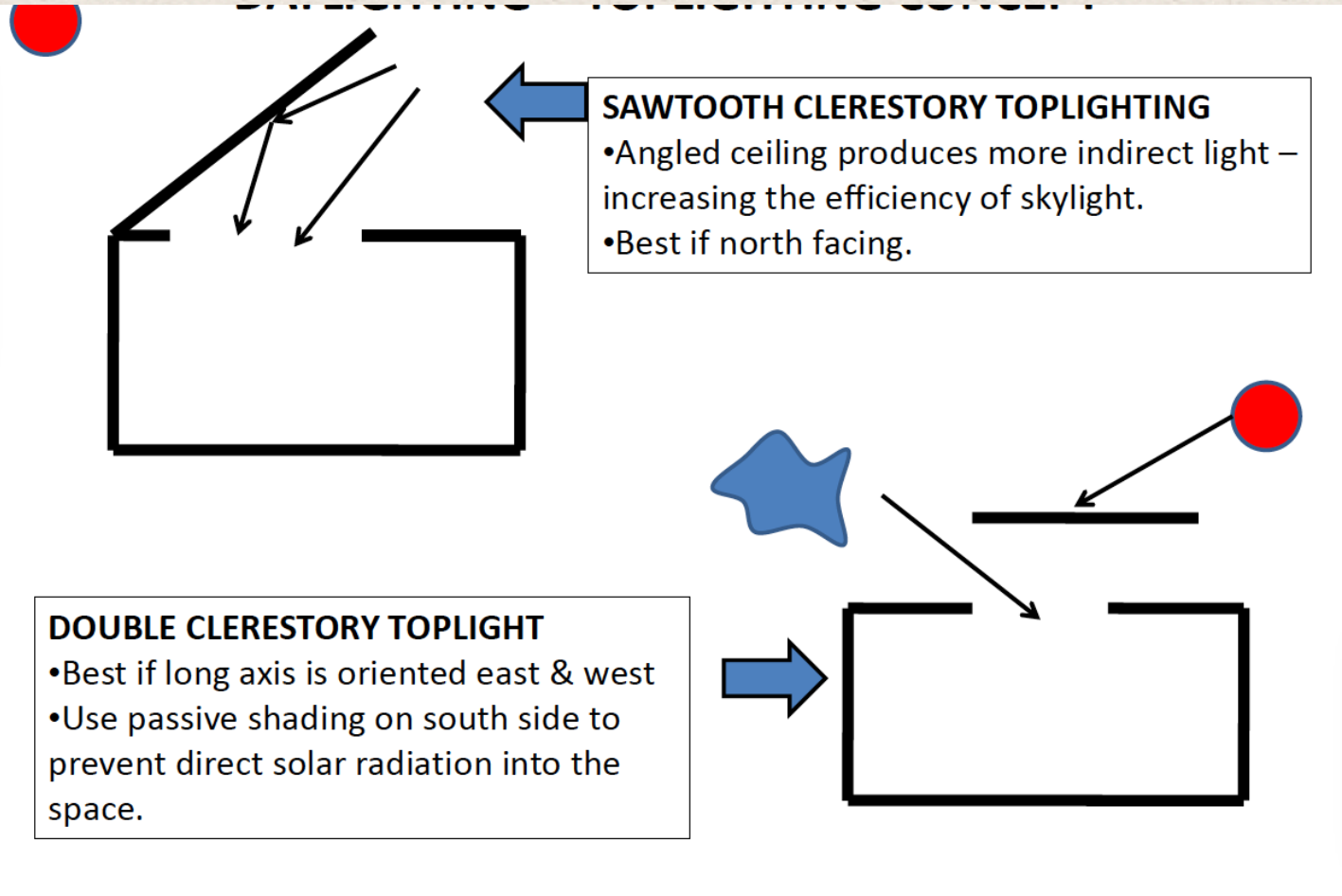

Design Strategies

- Overhang soffits provide a limited amount of shading.
- Best employed on the south façade (northern hemisphere) of the building.

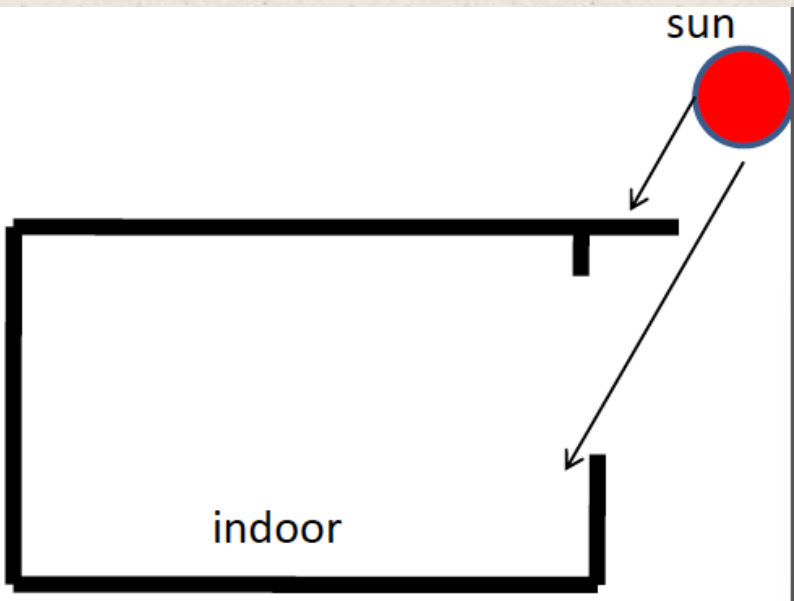

SOFFIT OVERHANG

Design Strategies

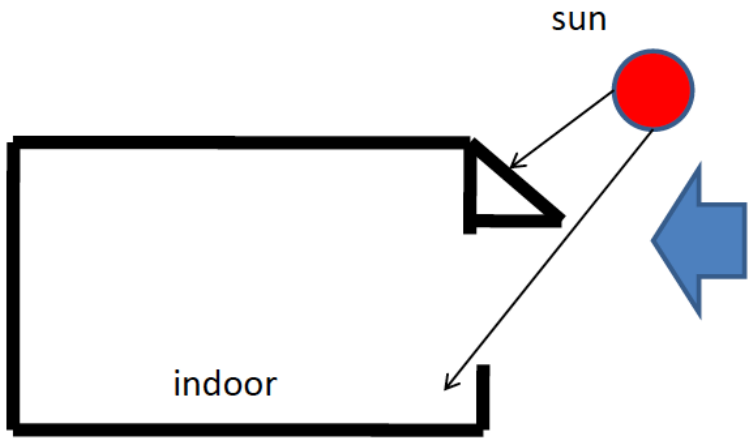

AWNING

- Awnings / other extended shades offer additional protection.
- Generally needed on the east & west façade of the building.

- A light shelf provides both shading & indirect lighting for the space – increasing the amount of daylight depth penetration.
- Most effective on the south façade – can be employed on east /west façade.

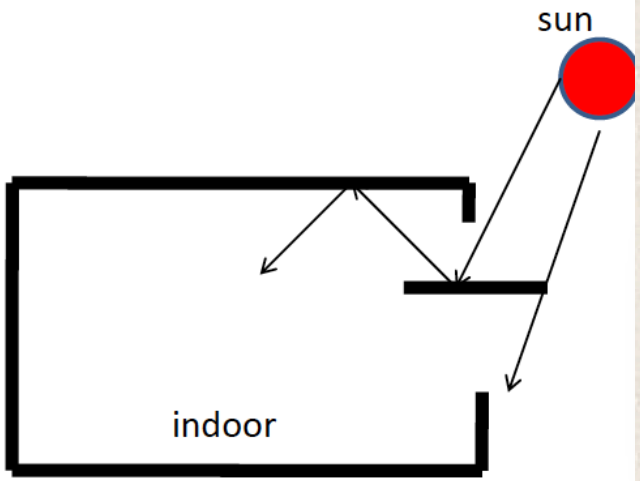

LIGHT SHELF